PekaStroj

Chuť vašich pekárenských výrobkov zvýraznia naše stroje, kvalitná podpora a vaša spokojnosť

JAC · sottoriva · pavoni ITALIA · Europa bakery pastry pizza · MIXER ART OF MIXING · POLIN GROUP

... pečieme s vami už viac ako 25 rokov

www.pekastroj.sk

Horizontal cut slicers

ZIP

- ✓ Speed of execution
- ✓ Maximum safety
- ✓ First-rate hygiene
- ✓ Stainless steel exterior
- ✓ Versatility

Up to 2000 cuts an hour

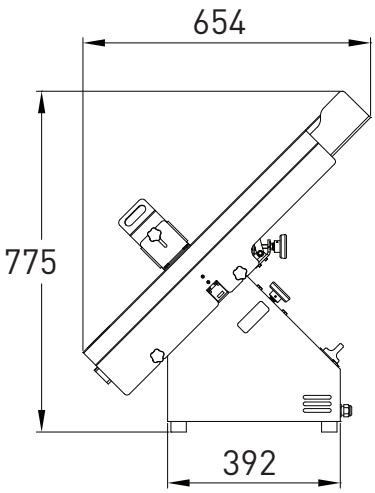

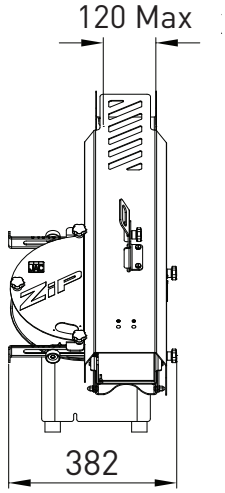

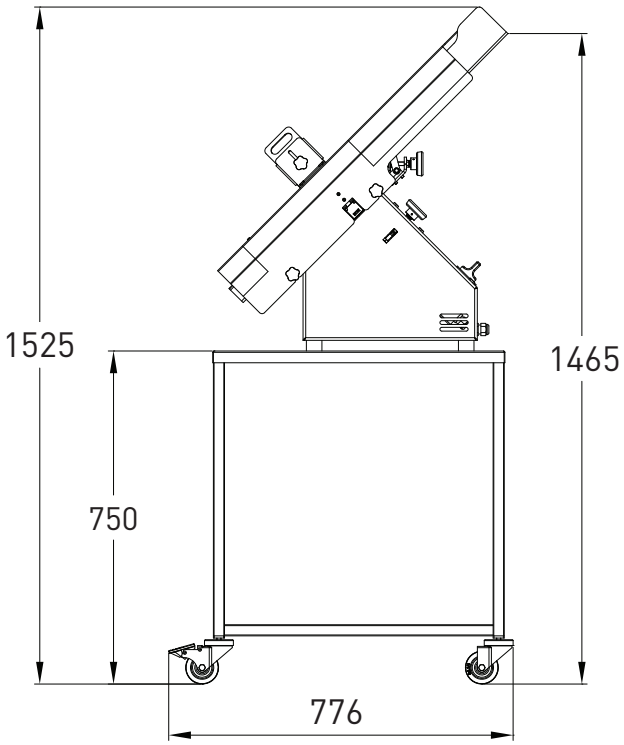

JAC Traditionally Innovative

www.jac-machines.com info@jac-machines.com

Adjustable cutting tunnel
The adjustable height and width allow several types of loaves to be held, while ensuring a clean, precise cut.

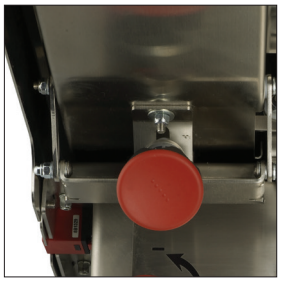

Blade adjustment handle
To set the height and depth of the cut in the bread.

Stainless steel shutter
Finger protection system fixed at the outlet of the cutting area.

Stainless steel base

Two bread recovery trays

Wheeled tray support

	ZIP
FEATURES	
Max/min bread dimensions (W x H) in mm	60 x 60 / 120 x 80
Type of motor	230V single phase
Motor power in kW	0.49
Net weight (in kg)	35
Blade type and dimensions in mm	300 mm diameter steel

OPTIONS	
Stainless steel base	•
Wheeled tray support	•
Two bread recovery trays	•

Non-binding photographs and technical information

DÔVERA
25
ROKOV
SKÚSENOSTÍ

Daniela Kováčová
konateľka spoločnosti

PekaStroj s.r.o.

Priemyselná 4, 949 01 Nitra
tel.: +421 37 651 676 2
mobil: +421 902 944 531
info@pekastroj.sk
www.pekastroj.sk

PekaStroj

... pečieme s vami už viac ako 25 rokov

www.pekastroj.sk