PekaStroj

Chuť vašich pekárenských výrobkov zvýraznia naše stroje, kvalitná podpora a vaša spokojnosť

JAC · sottoriva · pavoni ITALIA · Europa bakery pastry pizza · MIXER ART OF MIXING · POLIN GROUP

... pečieme s vami už viac ako 25 rokov

www.pekastroj.sk

DRAGO 890

890/124

890/62

- Steamer for each deck (ovens width = 62 excluded: 1 steamer every 2 decks)
- Baking plates in "fibre-cement"
- Hood with exhaust fan
- Chimney silencer and soundproof panels in the bench
- Safety thermostat
- Anticorrosion kit (i.e. Steam generators heads and connecting pipes)
- Doors with low emission dismountable glass
- Steam control with electrovalve with timer (SIMPLE excluded)
- Automatic start (excluding SIMPLE)
- Baking timer (excluding SIMPLE)

Power inlet	230/3~/50 400/3N~/50
Water inlet	Diameter 3/8" GAS
Steamer drain	Diameter 1" GAS
Steam exhaust output	Dr. 62 diameter 150 mm Dr. 124 diameter 200÷250 mm
Fume exhaust pipe	Diameter 150 mm

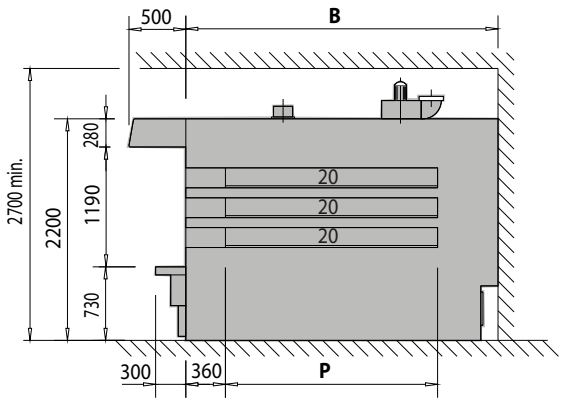

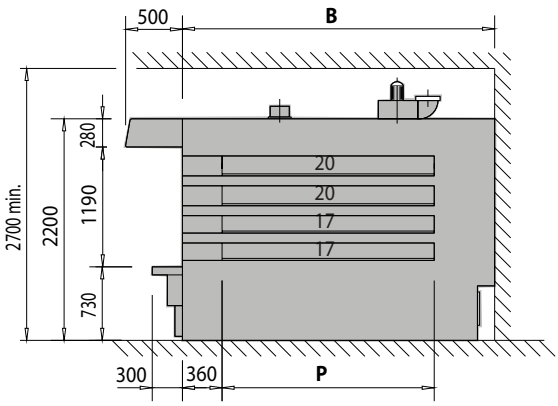

Mod. 62-4 Chambers

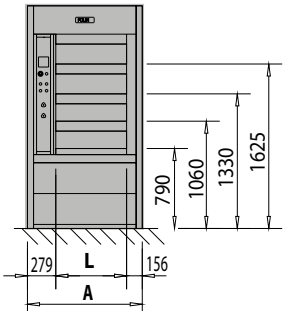

Mod. 124-3 Chambers

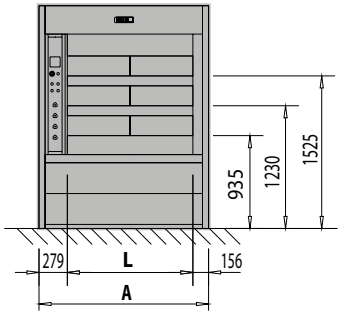

Mod. 124-4 Chambers

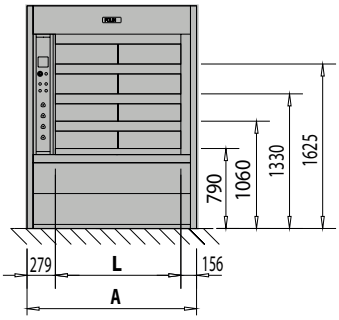

	Baking Surface	Chambers	Useful Dimension Chambers		Overall dimensions		Installed power	
			Width	Depth	Width	Depth	Thermic	Electrical
	mq	n°	**L** mm	**P** mm	**A** mm	**B** mm	kcal/hx1000	kW
4,2/62x170-4	4,2	4	620	1700	1055	2680	41	2,3
5,3/62x214-4	5,3	4	620	2140	1055	3120	45	2,3
6,4/62x258-4	6,4	4	620	2580	1055	3560	49	2,3
6,3/124x170-3	6,3	3	1240	1700	1675	2680	55	3,9
8,4/124x170-4	8,4	4	1240	1700	1675	2680	70	3,9
8,0/124x214-3	8,0	3	1240	2140	1675	3120	65	3,9
10,6/124x214-4	10,6	4	1240	2140	1675	3120	75	3,9
9,6/124x258-3	9,6	3	1240	2580	1675	3560	75	3,9
12,8/124x258-4	12,8	4	1240	2580	1675	3560	78	3,9

POLIN
Ing. POLIN & C. S.p.A.
Viale dell'Industria, 9 - 37135 Verona - Italy - Tel. +39 045 8289111 - www.polin.it - polin@polin.it

DÔVERA
25
ROKOV
SKÚSENOSTÍ

Daniela Kováčová
konateľka spoločnosti

PekaStroj s.r.o.

Priemyselná 4, 949 01 Nitra
tel.: +421 37 651 676 2
mobil: +421 902 944 531
info@pekastroj.sk
www.pekastroj.sk

PekaStroj

... pečieme s vami už viac ako 25 rokov

www.pekastroj.sk