PekaStroj

Chuť vašich pekárenských výrobkov zvýraznia naše stroje, kvalitná podpora a vaša spokojnosť

JAC · sottoriva · pavoni ITALIA · Europa bakery pastry pizza · MIXER ART OF MIXING · POLIN GROUP

... pečieme s vami už viac ako 25 rokov

www.pekastroj.sk

JAC VARIA SELF

- **Versatile**
- **Fast:** 180 slices / minute
- **Easy:** Intuitive touch screen and lighting guidance for enhanced consumer experience
- **Design:** Full stainless steel or painted steel finish
- **Maximum safety**
- **Exemplary hygiene**

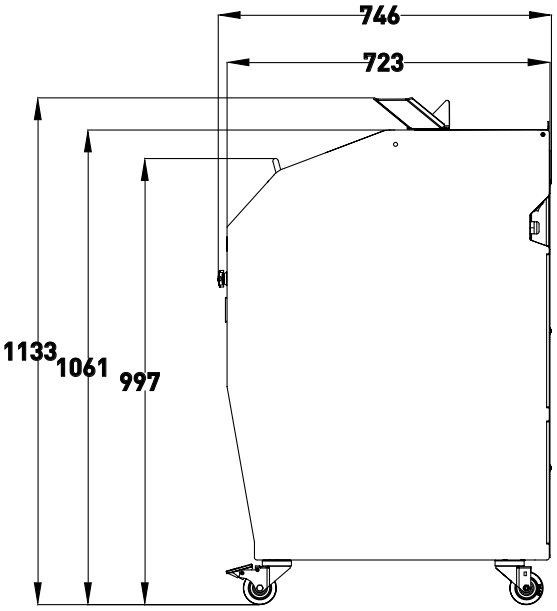

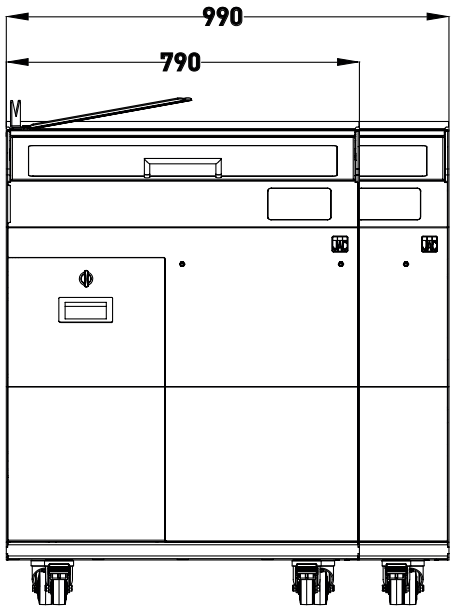

Best-in-class slicing performances for a wide range of bread

Smooth and quiet for all breads
- New engine generation designed for maximum precision on a wide range of breads, without lubrication
- Soft start and stop function

Adjustable (to be performed by technician) speed up to 180 slices / minute
- In order to reach the fastest possible speed for each bread type

Teflon coated circular blade
- Developed to cut through a large variety of breads; from soft to dense, with a hard crust, and even sticky breads

Planetary blade drive
- Fluid blade movement, avoids back-and-forth shakes
- Robust solution for long-term mechanical reliability

State-of-the-art ergonomics

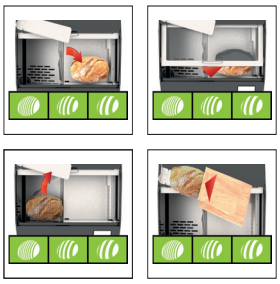

Touch screen interface and consumers instructions
- Clear and simple interface, for an immediate and intuitive use

Automatic grip
- Minimized last slice width

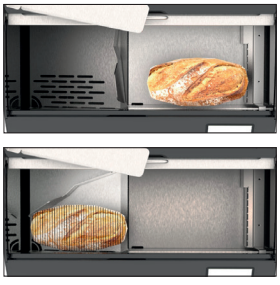

Lighting guidance and ambiance
- Lights insertion zone then exit zone

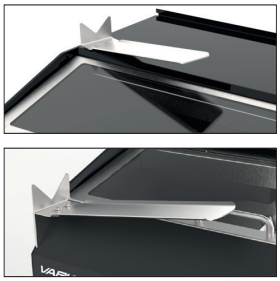

Multi-positions adjustable bagging spade
- Rotating spade, above cutting chamber, to optimize ergonomics and hygiene
- Two standard (left and right) bagging spade positions
- Or non-rotating front position (option)

Upper cover
- Prevents objects placed on the machine (e.g. bags) to be pushed inadvertently behind the machine when opening the front cover
- Rotates for easy cleaning

Easy to access power switch
- Accessible from the front of the machine, but not visible; avoids operations by a non-authorized person

Safe and clean environment

Maximum safety
- Highest safety standards, for machine use by consumers and staff
- The blade cannot run when the machine is not 100% locked

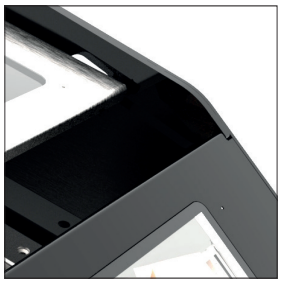

Anti-pinch design
- Users cannot inadvertently pinch their fingers in the front cover sliders

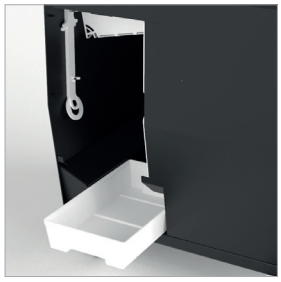

Easy & fast cleaning
- Internal architecture designed to channel bread crumbs to an easily accessible crumb tray
- Flat surfaces (without recess around)

Make it your own

Exterior

- 4 colours available as standard

- Full stainless steel (structure and outer panels) (option)

- Choice of any color to match your own store themes (option)

Accessories to enhance staff and consumer experience

- Clip box (option)

- Front bagging stand (option)

- Bag holder (option)

Features

	VARIA SELF 800	VARIA SELF 1000
FEATURES		
Size of entry channel (L x W x H) in cm	36 x 34 x 16	47 x 34 x 16
Slice thickness in mm	Can be set from 4 to 30mm	Can be set from 4 to 30mm
Power supply	220V single-phase	220V single-phase
Motor power in kW	0.75	0.75
Net weight (in kg)	230	250
Cleaning position	•	•
Lighting guidance and ambiance	•	•
Automatic grip	•	•
Blade type and dimensions in mm	420 mm diameter, Teflon-coated	420 mm diameter, Teflon-coated
CHOICES		
Standard colour (not compatible with stainless steel exterior)*	•	•
OPTIONS		
100% stainless steel (structure and exterior)	•	•
Special colour (not compatible with stainless steel)	•	•
Clips box	•	•
Bag holder	•	•
Front bagger stand	•	•

*STANDARD COLOURS

RAL 3013

RAL 9005

RAL 9006

RAL 9010

DÔVERA
25
ROKOV
SKÚSENOSTÍ

Daniela Kováčová
konateľka spoločnosti

PekaStroj s.r.o.

Priemyselná 4, 949 01 Nitra
tel.: +421 37 651 676 2
mobil: +421 902 944 531
info@pekastroj.sk
www.pekastroj.sk

PekaStroj

... pečieme s vami už viac ako 25 rokov

www.pekastroj.sk